技术参数

声光介质	Crystalline Quartz
声速	5.74 mm/μs
通光孔径*	1.2 mm 'H'
中心频率	80 MHz
射频带宽	10 MHz @ -9 dB Return Loss
输入阻抗	50 Ohms Nominal
驻波比	1.2 :1 Max
工作波长	1064 nm
插入损耗	1 % Max
单面反射率	0.1 % Max
增透镀膜标准	MIL-C-48497
光功率密度	500 MW/cm^2
消光比	1000 :1 Min
偏振	90 ° To Mounting Plane

波长性能参数

工作波长 (nm)	**1064**
射频驱动功率(W)	10
布拉格角(mr)	7.4
光束分离角 (mr)	14.8

光束直径性能参数

光束直径 (μm)	**550**
对应工作波长 (nm)	1064
衍射效率 (%)	NA
上升时间 (nsec)	115
调制带宽	10
光束椭圆度	NA

特殊测试项目	**Min**	**Units**	**Max**
损耗调制	80	%	

*通光孔径：器件中适用于规定性能指标的有效通光孔径范围。

外形尺寸图: **Package 97-02913-05-15rE**

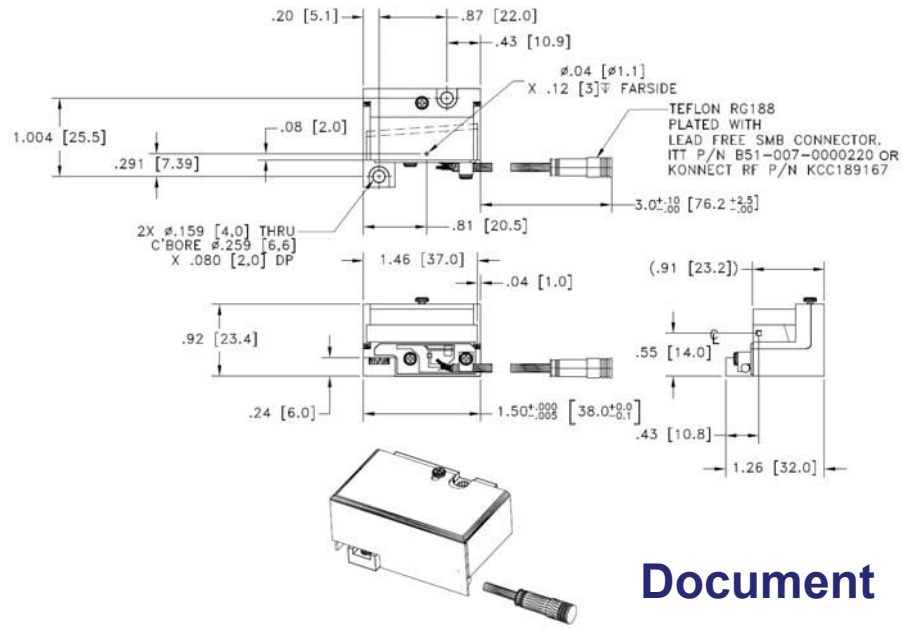

Document

02/12/19

Control

Notes:
Optical path 36mm; conduction cooled through base.
Optical window parallelism <1 arc minute.
ROHS compliant materials.
Loss modulation 80% @ 10W with 550um beam waist and a 700um beam height.
Each device to be shipped with cover which is not show in outline.

新特光电 Sintec Optronics

THIS DOCUMENT IS THE PROPERTY OF GOOCH AND HOUSEGO. IT IS NOT TO BE REPRODUCED OR DISCLOSED IN WHOLE OR IN PART OTHER THAN BY EMPLOYEES GOOCH AND HOUSEGO AND ITS CONTRACTED REPRESENTATIVES AND DISTRIBUTERS. ANY EXCEPTION REQUIRES THE WRITTEN CONSENT OF AN AUTHORIZED REPRESENTATIVE OF GOOCH AND HOUSEGO.

TOLERANCES: .XX ± .01 .XXX ± .005	DR	Geri Scholz 2/6/2019	Gooch & Housego		
MATERIAL:	CHK	RoHS Compliant	DESCRIPTION: AOQS 5080-290 35mm, 1064nm		
FINISH:	APP				
	APP		PART NUMBER: 97-02913-05	REV: G	SHEET 1 OF 1